Installation manual

iGuard® *LE*

The digital video recording system

Rev. 2.50

Status: December 2004

© 2004 IDS Imaging Development Systems GmbH. All rights reserved.

Dimbacher Strasse 6
D-74182 Obersulm
Fax: +49/(0)7134/96196-99
eMail: sales@iguard.de

Preface

We have taken every possible care in preparing this manual. Nevertheless, we are unable to provide any guarantee with regard to content, entirety or quality of the details contained in this manual. The contents of this manual are revised regularly and brought up to latest standards. Furthermore, we are also unable to guarantee that the product will operate fault-free even if the specifications and recommended system configuration are observed.

Under no circumstances whatsoever are we able to guarantee that a specific application objective can be achieved with the purchase of this product.

Liability for immediate damages, subsequent damages and damages to others resulting from the purchase of this product is excluded within the terms of existing legislation. Liability under any circumstances is restricted to the product price.

Furthermore we exclude any liability for any possible increase in telephone costs due to unwanted connections during the use of iGuard® RemoteView and/or iGuard®.

All rights reserved. This manual may not be copied, reproduced, transcribed or translated into another language in part or full without the written permission of *IDS Imaging Development Systems GmbH*.

Status: December 2004

Copyright
© IDS Imaging Development Systems GmbH. All rights reserved.

IDS Imaging Development Systems GmbH grants the purchaser the right to use the software herewith. Copying the software in any form whatsoever, with the exception of a backup copy, is strictly forbidden.

Use MJPEG-Codec from MainConcept GmbH Aachen (© 1999 MainConcept GmbH) for video compression if using a FALCON series framegrabber.

Security
We mention that the content of this manual is not a part of an earlier treatment. All garantees are based on your license treatment, when you bought the system.
If you need further information or if you have special problems which are not mentioned in this manual, you can contact your installer, or the address listed below.

The installation and maintenance must be done by qualified personell.

The correct and secure function of this system is based on careful transport, correct storing, installation and maintenance.

Data Security
You can also store data of persons. Please take care of legilative oreder concerning data security.

The system and any storage media as floppy-discs, CDs,, removable disks etc. should also only be reachable for you or authorised persons..

 © 2000-2004 by IDS Imaging Development Systems GmbH

Environment
Please take care of the correct use of this system. Otherwise quarantee cannot be granted.

Take care of direct sun-, wetness- and shock-protection.

The following environment is necessary:

Use:
Temperature: 0° C to 60° C

Non use:
Temperature: -20° C to 80° C

Installation and maintenance
The installation, maintenance and perhaps repairing must be done by qualified personell.

Trademarks
IDS Imaging Development Systems, intermedia-x and iGuard® are registered trademarks of IDS Imaging Development Systems GmbH. IBM PC is a registered trademark of International Business Machines Corporation. Microsoft is a registered trademark and Windows a trademark of Microsoft Corporation. All other products or company names which are mentioned in this manual are used solely for the purpose of identification and/or description and can be the trademark or registered trademark of the respective owners.

Contacting us

Visit our web site where you will find all the latest drivers and information about our software and hardware products as well as our partners and distributors.

Internet:	http://www.iguard.de http://www.ids-imaging.de
Anschrift:	IDS Imaging Development Systems GmbH Dimbacher Strasse 6 D-74182 Obersulm
Fax:	07134/96196-99
Email:	Vertrieb: sales@iguard.de Support: support@iguard.de

© 2000-2004 by IDS Imaging Development Systems GmbH

Contents

1 Introduction 1

2 Prerequisites 3

2.1 Operating system 3

2.2 Hardware 3

2.3 Resolution and file format 4

3 Hardware Installation 5

3.1 Board installation 5

3.2 Two-board support 6

3.3 Optocoupler board (available as option) 9

4 Software Installation 10

4.1 iGuard® Installation 10

4.2 Harddisc DMA (direct memory access): 12

5 Hardware Description 14

5.1 FALCONplus 14

5.1.1 Digital TTL-I/O inputs 14

5.1.2 Video recording 15

5.1.3 Switchover speeds 15

5.1.4 Multiple board support 15

5.1.5 Video Output 15

5.1.6 Switchable 75 Ω termination 15

5.1.7 Video Daisy Chain 15

5.1.8 Hardware Watchdog 16

5.1.9 Accessories 16

5.2 FALCONquattro 16

5.2.1 Video recording 17

5.2.2 Digital TTL I/O 18

5.2.3 Video Output 18

5.2.4 Switchable 75 Ω termination 18

5.2.5 Hardware Watchdog 18

6 iGuard® UPS operation 19

6.1 Preconditions 19

6.2 Installation of iGuardPowerFailure.exe 19

6.3 Call-up parameters for iGuardPowerFailure.exe 19

6.4 Configuration of the "DataWatch" software of online UPS in Windows 19

7 Appendix 23

7.1 FALCONplus/FALCONquattro board technical data 23

7.1.1 FALCONplus plug connectors 24

7.1.2 FALCONquattro pin assignment 25

7.2 Optocoupler-boards for FALCONplus, FALCONquattro (optional) 28

7.2.1 Connecting the frame grabber 29

7.2.2 36 pin adapter bushing (J10) of the OPTO I/O III 30

7.2.3 Input circuit OPTO I/O III 31

7.2.4 Output circuit of the OPTO I/O III 31

7.2.5 Optocoupler boards technical Data 32

Table of figures 33

Index of tables 33

 © 2000-2004 by IDS Imaging Development Systems GmbH

1 Introduction

Thank you for your decision to purchase iGuard®. iGuard® is a digital video recording system for the surveillance of rooms, premises, buildings, production workshops, critical public areas or any outdoor areas where security is important. Recording is possible with up to 32 cameras at the same time. A simultaneous display of all cameras for live surveillance is possible at the same time as recording. You bought a professional product based on a high quality standard. iGuard itself is one of only a few applications in its price/performance class which can be acquired to build an own DVR.

Basically the system allows two different operational recording modes which may also be combined with each other:

- Longtime recording analogous to the operation of a standard video recorder, which however has an option for recording of only motion pictures
- event-triggered recording, that is the recording of alarms with their pre-history via a ring buffer

In case of event-triggered recording the system is controlled through digital inputs which can be connected with any form of event triggering sensors. In addition, the system allows a logical operation of external sensors with an internal generated digital input. Motion detection with the connected cameras which then operate as video sensors is already integrated into the software.

This means that the system is fully customisable so to speak and allows a definition of all forms of alarm scenarios according to date, time, connected periphery, ambient conditions and plausibility routines. External reactions to occurring alarms are controlled through digital outputs.

Additional iGuard supports the PTZ of some the most popular suppliers like Panasonic, Pelco, Sensormatic and Sony. The Audio recording of one channel can be done over the build in sound card.

With iSearch iGuard supports you in searching scenes and movings inside recorded images. An optimised possibility to transfer data over ISDN and LAN as well as Multi Client functionality and Triplex mode are build in features inside iGuard.

iGuard® therefore offers the best possible customisation to your application, both with regard to your various different alarm triggers such as for instance cameras, light barriers etc., and also in case of alarms to control your various external devices such as for instance sirens, alarm systems, lighting etc.. By defining different alarm scenarios, you also have the opportunity to adjust the video recording to the actual surveillance task in question and thereby maximise the performance of your system.

In addition, iGuard® possesses a well-planned user administration. By issuing a total of 8 user rights, it allows for each user to have access to certain functions on an individual basis according to his/her range of tasks; such access may also be

© 2000-2004 by IDS Imaging Development Systems GmbH

denied to others. This enables you to make the best possible adjustment to your particular requirements.

Finally, iGuard® is developed in terms of clarity and comprehensibility of the windows and dialogues. Most buttons are provided with easy to understand symbols that are placed at suitable points within the window. This allows for intuitive operation of the program. However, if questions do arise, a powerful online help is available at any time.

The delivery includes, free of charge, the iGuard® RemoteView and iGuard® Player programs in addition to the iGuard® program itself. Using iGuard® RemoteView, you have the opportunity to remote access (via LAN or ISDN) the system in order to revise the recorded videos. Here iGuard® RemoteView functions as a client accessing iGuard® as a server. When operating iGuard® with separate hard discs, iGuard® RemoteView enables you to carry out local playback on an external PC. iGuard® Player gives you the capability to replay video recordings or exported AVI sequences.

We would like to wish you every success with this product. Please do not hesitate to contact us as manufacturer or your individual installer at any time if you have any further questions.

About this manual:
A complete version of this manual can be found in Adobe Acrobat format (PDF) on the iGuard® CD. This is the most recent version, unless changes have been made after the printing of this manual. All subsequent alterations have been included as far as possible.

© 2000-2004 by IDS Imaging Development Systems GmbH

2 Prerequisites

2.1 Operating system

iGuard® was developed for operation with Microsoft Windows 2000® and Windows XP®. The desktop resolution must be at least 1024x768 pixel with 15/16-bit colour resolution. We recommend a resolution of at least 1280x1024 with 15/16-bit colour resolution.

The additional programs iGuard® RemoteView and iGuard® Player can be operated in Windows 2000® and Windows XP®.
The operating systems Windows 95/98, Windows ME and Windows NT will no longer be supported.

2.2 Hardware

In iGuard®, dependant on the system, the FALCONplus or FALCONquattro frame grabber of the IDS Imaging Development Systems GmbH is used.

The video data is stored on local hard disks. The use of removable hard discs is possible, too. The direct storage on removable media as DVD-RAM, DVD-/+R DVD-/+RW, CD-R/W is possible since version 2.45 (see user manual for details).

The Hardware-drivers support an Interrupt-Sharing with other devices (therefore the driver of the other device must support an Interrupt-Sharing as well):

Harddisc compression: There is no use of harddisc compression. First, the image data is already compressed, and besides, the additionally gained memory wouldn't justify the performance forfeit (the compression affects the harddisc access speed).

For the use of a telecommunication via ISDN we recommend to use ISDN boards of AVM: FRITZ! PCI or FRITZ! USB 2.0. In case of questions concerning the installation of these boards please apply to the manufacturer.

FALCON attributes
The following restrictions apply for operating FALCON:
The graphics card must include DirectDraw support with the required DirectDraw functions. There is no software emulation of the DirectDraw functions. With regard to DirectDraw functions, it should be noted that they depend not only on the graphics hardware used but also very specifically on the graphics drive being used. The drivers of the same graphics card can offer different DirectDraw support with different operating systems or different driver versions. For this reason, IDS is unable to guarantee perfect functioning with all available graphics cards on the market. Although iGuard® checks whether the graphics driver provides all the necessary DirectDraw functions, it is possible that a graphics driver registers a

DirectDraw function which it is not really able to provide or not with the required performance.

The following attributes apply for operating a FALCON:

Operating mode	Images/s per camera	Images/s total
1 FALCONplus + 2 to 4 cameras	3 to 6	12
2 FALCONplus + 2 cameras (per FALCON 1 camera)	25	50
2 FALCONplus + 2 to 4 cameras per FALCONplus	3 to 6	24
1 FALCONquattro up to 4 cameras	25	100
1 FALCONquattro > 4 cameras	3 to 25	48 to 87

Table 1: Attributes for operating with FALCON

2.3 Resolution and file format

The files stored by iGuard® have the extension .IGD and are compliant to the AVI-fileformat. The resolution of the stored images is (by using normal resolution) 384x288 Pixel and (by using high resolution) 768x288 Pixel.

© 2000-2004 by IDS Imaging Development Systems GmbH

3 Hardware Installation

Note!
If using Windows 2000® or Windows XP®, the software should be installed completely (see *4 Software Installation*) before installing the hardware.

Warning! Static electricity!
Make sure that you discharge to earth any static electricity in your body before working on the inside of the PC. Failure to do so can result in an electrical discharge destroying hardware components.

When installing the FALCONplus/FALCONquattro, make sure that the driver of a TV tuner board (e.g. WinTV from Hauppage) or a comparable multimedia board with a Bt848 or Bt878 chip has been removed completely beforehand from your computer. The drivers of various other suppliers overwrite part of the EEPROM of the FALCONplus/FALCONquattro board immediately after they are started without checking beforehand whether the installed board comes from another manufacturer. The result is the FALCON driver can no longer recognise the board. Reprogramming the EEPROM can only be carried out by IDS GmbH at a charge!

For this reason, parallel operation of multimedia boards from other manufacturers with the FALCON board is not possible!

3.1 Board installation

This chapter describes the installation of the FALCONplus/FALCONquattro in your system. Please turn your system off before carrying out installation. In order to prevent any destruction of electronic components on the p.c. touch the housing to discharge any static electricity in your body by feeding it away through the housing. The installation is very easy. Please observe the following steps:

- Pull out the mains plug. When using ATX motherboards, it is possible that the PCI-bus is still live after switching off the system. Plugging in or removing boards in this state can result in the motherboard and/or the FALCONplus/FALCONquattro being destroyed.
- Open the housing.
- Remove the cover of a PCI slot not in use which has bus mastering function. See the manual of your motherboard to find out which slot has bus mastering function.
- Insert the FALCONplus/FALCONquattro in the free PCI slot of your system. The board was designed so that the FALCON can be inserted into slots which are normally available for short plug-in boards. Make sure that your FALCON does not come into contact with any electric components such as plug pins or components of the system or touch the neighbouring board.

Static electricity - leakage current
Avoid contact with any components, circuit-board conductors and plug pins! There is a danger of components being destroyed by the discharge of static electricity!

Condensation can form on the surface of the board following transportation of the FALCON - particularly with cold outside temperatures - leading to leakage current and malfunctions as a result. Allow the FALCON to warm up to room temperature first before putting it into operation.

- Fasten the slot cover of the FALCON in place with a screw.
- Check again that the board is inserted correctly into the system slot.
- Close the system.
- Connect the video sources using the BNC connectors.

Recommended slots
We recommend inserting the board in PCI slot 2 or 3. Check for sure in the manual of your PC or motherboard that the PCI slot you use has bus mastering function.

BIOS settings
Check the settings of your BIOS to make sure that the bus mastering function is switched on for the selected slot. If you cannot find any such setting in your BIOS, it can be assumed that the bus mastering is always switched on. If your BIOS also allows PCI specification selection, make sure that you use PCI specification 2.1.

3.2 Two-board support

Board-ID
With two-board support of the FALCONplus, make sure that each board can be addressed individually. Each board has a clearly defined identification number (*BoardID*) for this purpose so that it can be identified. The BoardID is set to 1 as standard. If several boards are being used in a system, the boards will have to be allocated individual board ID's. This assignment is carried out using the IDSID.EXE program.

When allocating the board ID's, it is advisable to make a note of the boards' serial numbers in the order of their installation (from right to left or similar).

iGuard® LE always requires a FALCONplus with BoardID 1 and with two-board support additional FALCON with rising uninterrupted board ID (2).

Important: If an optocoupler board is being connected, it can only be connected to the FALCON with board ID 1!

The board ID's are assigned appropriate serial numbers using the IDSID.EXE program. In the dialogue box shown below, select a board in the *Select board* input field, enter the appropriate board ID and save the entry with the *Set ID* touch button.

© 2000-2004 by IDS Imaging Development Systems GmbH

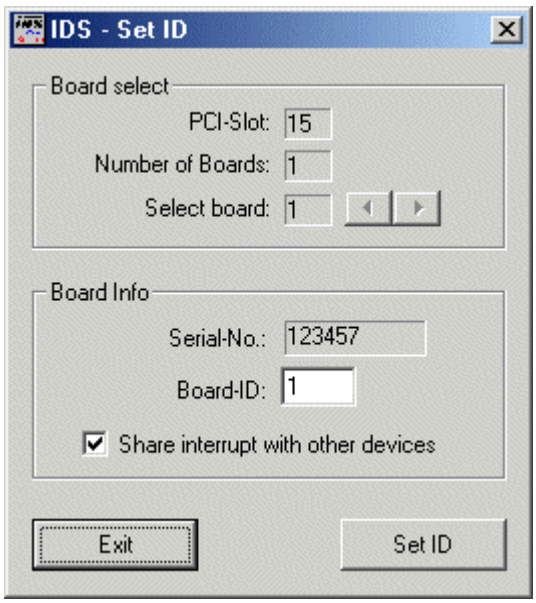

Figure 1: *Set ID*

Board select section

PCI-Slot:
States the number of the PCI-Slots where the corresponding FALCONplus board has been inserted. The numbering of the PCI slot depends on the mainboard of your computer and does not necessarily start with us (a system with 4 PCI slots, for instance, usually does not have PCI slot numbers 1-4 but numbers such as 14-17!!!).
Number of Boards:
Specifies the number of available FALCON boards.
Select board:
Selects one of the available FALCON boards. Its data is contained in the BOARDINFO section. A board can be selected using the two touch buttons.

Board Info section
Serial-No.:
Shows the 6 to 8 digit serial number stored in the board's EEPROM.
Board-ID:
Identification number of this board. The number identifies a specific board if multiple board operation is being used. The standard value for a board ID is 1. Alphanumerical figures or negative numbers are not permitted. Value range of the board ID: [1...254].

© 2000-2004 by IDS Imaging Development Systems GmbH

IDS info

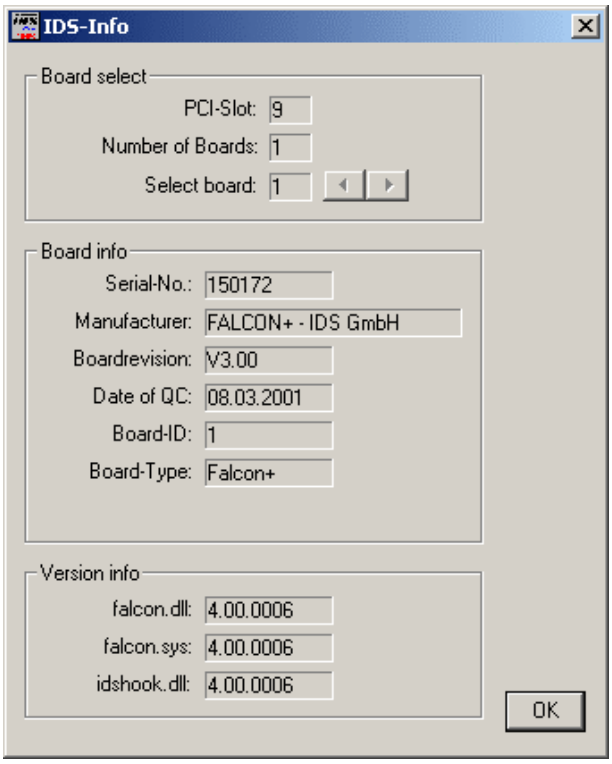

Figure 2: *IDS info*

Board select section

- *PCI-Slot:*
  States the number of the PCI-Slots where the corresponding FALCON board has been inserted. The numbering of the PCI slot depends on the mainboard and does not necessarily start with 1 (a system with 4 PCI slots, for instance, usually does not have PCI slot numbers 1-4 but numbers such as 14-17!!!).
- *Interrupt:*
  States the interrupt occupied by the selected board.
- *Number of Boards:*
  Specifies the number of available FALCON boards.
- *Select board:*
  Selects one of the available FALCON boards. Its data is contained in the *BOARDINFO* section. A board can be selected using the two touch buttons.

Board info section

- *Serial-No.:*
  Shows the serial number stored in the board's EEPROM. This is a 6 or 8 digit serial number.
- *Manufacturer:*
  Details of the manufacturer of the board.
- *Board revision:*
  The current hardware revision of the board.
- *Date of QC:*
  Date of final test (quality control) of the board.

© 2000-2004 by IDS Imaging Development Systems GmbH

- *Board-ID:*
  Identification number of this board. Boards can be differentiated and selected individually using this number if running with multiple board operation. The ID can be defined by the user (program: *IDSID.EXE*). The standard value for board ID's is 1.
- *Board-Type:*
  Type number of the board.

Version info section

falcon.dll	Version info of the API programming DLL
falcon.sys	Version info of the system driver
falchook.dll	Version info of the hook DLL

3.3 Optocoupler board (available as option)

An optocoupler board can also be purchased as an optional extra to the FALCONplus and FALCONquattro and allows the connection of alarms for event controlled recording and the control of switch outputs as a reaction to alarms.
A ribbon cable is included with the optocoupler board for connection of one of the FALCON boards with the optocoupler board. The optocoupler board does not require a plug-in slot in the system. Next to the slots, there's an unused panel in the system housing. Remove the panel and connect the optocoupler board there. Trigger signals and the digital inputs/outputs are connected using the provided 25-pin DSUB plug to J5.

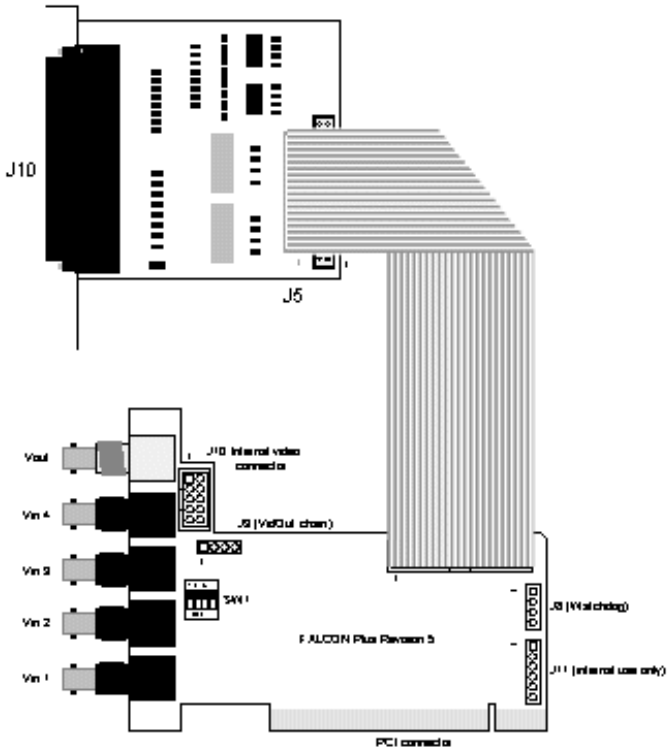

Figure 3: *FALCONplus with connected optocoupler board*

4 Software Installation

Note!
If using Windows 2000® or Windows XP®, the software should be installed completely before installing the hardware (FALCON).
If the hardware does not function properly after installing the software, remove manually all unknown multimedia devices from the device manager. When the computer is started again, the hardware being used should be detected and started correctly.

4.1 iGuard® Installation

In order to install the soft- and hardware in Windows NT 4.0®, simply start the iGuard® installation program **setup.exe** in the root directory of the supplied CD. The installation program will start automatically when the CD is inserted if your operating system has the appropriate configuration.

Note!
Administrator rights are necessary to install the frame grabber within Windows 2000® and Windows XP®. This applies to both new installations as well as for any subsequent driver update.

You have several possible methods of installation available, depending on whether you wish to install iGuard® and/or iGuard® RemoteView or iGuard® Player. User defined installation is of course also possible. The following 5 installation versions can be selected:

FALCON (FALCONplus/FALCONquattro)
The installation *FALCON* corresponds with an installation of iGuard® as server with FALCON as hardware components. The iGuard® RemoteView program (client) is not installed in this case. The online help, configuration files and documentation are installed along with iGuard®. The installation of the FALCON drivers, FALCON tools, iGuard® Player and software codecs also takes place.

Demo
In case of an installation as a demo version, iGuard® is installed with the configuration files, the hardware simulation, iGuard® RemoteView and iGuard Player®. Online help and documentation are also installed.

RemoteView Module
This installation version is intended for setting up an external client for the revision of recorded video data. In this version iGuard® RemoteView, iGuard® Player and the Software Codec are installed.

User defined
In the user-defined installation you are able to decide which components you wish to install or not. Components to be installed must be given a control tag. User defined installation should only be undertaken after careful consideration.

© 2000-2004 by IDS Imaging Development Systems GmbH

The corresponding drivers will then be installed; the names of the files will in all cases remain the same.

Note!
Should individual components of the software be damaged at a later date, it may be possible to attempt to repair these. The “Repair“ option will appear for this purpose after starting **setup.exe**. This will have the effect of re-installing every files that have been installed during the first installation. It should be noted that existing files may be overwritten in this procedure!

iGuard® is distributed with several language versions. For some of them there is no online help available so far. The installation program installs all languages and automatically uses the language which was specified in the system settings by country. The English language version is selected automatically if the chosen language is not available.

Further languages are intended for subsequent versions, or these can, as soon as other languages are available, be downloaded from www.iguard.de.

The following programm- and data base files can be found after the installation and initial startup of iGuard® within the installation directory on your system:

Files	Description
iGuard.dat	Configuration file including the settings of the application, the used hardware and the configured scenarios
iGuardUsers.dat	Configuration file including the settings of the user administration
iGuard_deu.pdf	German user manual
iGuard_enu.pdf	English user manual
IGuard_install_deu.pdf	German installation manual
IGuard_Install_enu.pdf	English installation manual
addresses.tbk	Telephone book of iGuard® RemoteView
iGuard_Messages.VDB	Data base file including the logbook entries
iGuard_Record.VDB	Data base file for the recorded video data
iGuardPowerFailure.exe	Program for automatic closing of iGuard® and shutting down the operational system thereafter in case of a power failure. This is called up by the software of the UPS (uninterrupted power supply)

Table 2: Installed Program- and Data base files in Windows

Checking installation under Windows 2000® and Windows XP®:
Please check the following points

- Was your video capture hardware recognised as FALCON? The following entry must be displayed in the device manager: IDS FALCON in sub-directory "Audio, video and game controllers".

  If an error has occurred while integrating into Windows, it is possible that the FALCON has been entered in another directory "Other components" or

"Unknown devices" as video controller or multimedia device. In this case, proceed as follows:

- Delete the entry and close the dialogue box
- Start the PC again
- Upon re-starting, Windows detects the FALCON as a new board. It should now be registered as described above.

- Has an interrupt conflict occurred?
  You will find the interrupt assignment in the device manager of your operating system.

NOTE:
Double assignment of interrupts is not always recognised by Windows as a conflict. The FALCON should not operate with a shared IRQ and should be assigned its own interrupt wherever possible. With ACPI-based systems, however, this is not always possible. For a non-ACPI-based installation of the operating system, press the F5 key when Windows 2000 Setup is displayed and then select the "Standard PC" option.

If the FALCON has not been assigned its own Interrupt, you will have to change the assignment:

- Interrupts can only be changed in BIOS or by changing slots. We recommend assigning the FALCON one of the interrupts 9, 10 or 11 or using the PCI slot 2 or 3.
- Further help for changing the interrupt can be found in your manuals for Windows and your PC or motherboard. There you will often find a table with a summary of the PCI slots and their interrupt assignment.

NOTE:
The Windows-2000/XP drivers of the FALCON are not certified by Microsoft. The user must have administrator rights to install the driver. In addition, the operating system must be configured so that it accepts non-certified drivers.

4.2 Harddisc DMA (direct memory access):

Digital video recording is to be regarded as equivalent to a high occurrence of data. It is imperative that hard discs with DMA capability be used with the hard disc controller of the main board operating in DMA mode so that the image data can be stored on the hard disc at sufficient speed.

Fundamentally, we recommend installing the mainboard manufacturer's latest chip set driver.
Image errors or omissions or other losses of performance noticed while operating iGuard® can be an indication of not only insufficient computer capacity or lack of RAM but also an insufficient data transfer rate from or to the hard disc.

In Windows 2000® or Windows XP® the operating system normally ensures that DMA is used for the transfer of data from or to the hard disc.

We recommend using fast SCSI hard discs (U2W or U160) or fast IDE hard discs (UDMA) with a speed of at least 7200 rpm for maximum performance and maximum data throughput. When using these hard discs, make sure adequate cooling

© 2000-2004 by IDS Imaging Development Systems GmbH

is provided because hard discs with speeds of 7200 rpm and more reach fairly high operating temperatures.

© 2000-2004 by IDS Imaging Development Systems GmbH

5 Hardware Description

5.1 FALCONplus

This chapter describes the hardware of the FALCONplus. It includes an explanation of interrelationships with a fundamental description of video recording. In addition, all relevant differences in comparison with the other FALCON boards are explained.

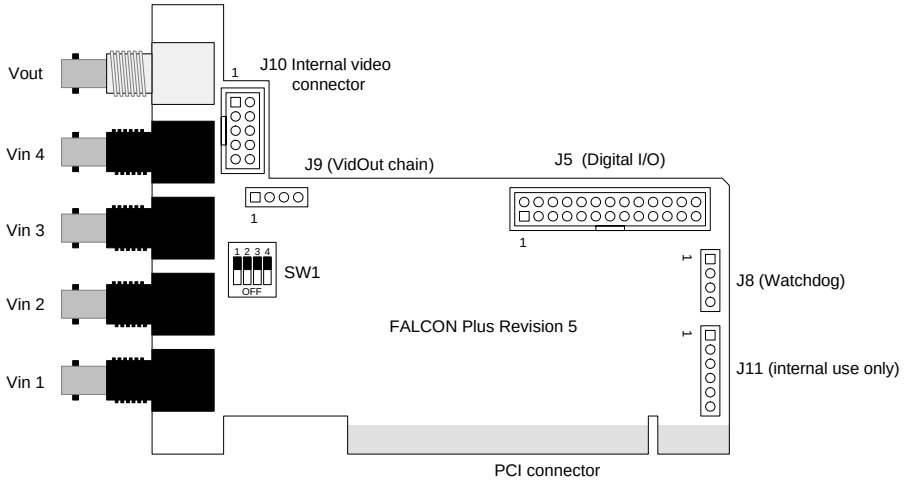

Figure 1: FALCONplus

	Plug connection	Signals
J5	26 pin pole-type	8 digital TTL-I/O, 4 trigger inputs each
Vin1...Vin4	BNC sockets	Video inputs 1– 4
Vout	BNC socket (white)	Video output

Table 3: FALCONplus plug connectors

Pin assignment of J5 is described in section *7.1.1 FALCONplus plug connectors*.

5.1.1 Digital TTL-I/O inputs

With FALCONplus there is the possibility of connecting up to 12 digital inputs (4 of which trigger inputs) and 8 digital inputs through the J5 26-pin pole-type plug connector on the FALCONplus board for controlling the video recordings. Eight digital outputs are also provided as alarm outputs. A matching optocoupler board can also be purchased as optional extra for connecting the digital inputs and outputs. Further details about the *optocoupler board* can be found in the corresponding chapter *7.2 Optocoupler-boards for FALCONplus, FALCONquattro (optional)*.

© 2000-2004 by IDS Imaging Development Systems GmbH

5.1.2 Video recording

With the FALCONplus board, you have the possibility of connecting up to 4 video sources if using one FALCONplus and up to 16 if using up to 4 FALCONplus. All cameras, however, must have the same video standard (e.g. PAL or NTSC).

When using n FALCONplus and n cameras we recommend to assign one camera to each FALCONplus to record 100 frames per second.

5.1.3 Switchover speeds

Up to 12 switchovers per second can be achieved with the FALCONplus in Multiplex mode. This figure applies separately to each FALCONplus if using more than one FALCONplus.

You can find a summary of switchover times for different operating modes in the table below.

Operating mode	1x FALCONplus		4x FALCONplus	
No. of cameras	1	2...4	4	Up to 16
Switchover speed	25	12.5	Up to 100	Up to 50

Table 4: FALCONplus switching rates

5.1.4 Multiple board support

The FALCON driver can support 4 FALCONplus cards at the same time. There is no multiple board support with other cards.

5.1.5 Video Output

With the FALCONplus Rev. 5 every video input can be through-connected to the video output. The video output is separated compared to the video input and has got an own 75 Ohm video buffer.

5.1.6 Switchable 75 Ω termination

The 75 Ohm termination of each of the four video inputs can be switched on/off by the on board DIP switch. The default setting is ON.

5.1.7 Video Daisy Chain

In a multiple board mode there is a video daisy chain available which gives the possibility to connect every video input (up to 16) to the video output.

The following figure shows the board-to-board connection of the video outputs with one shielded cable only. There is no limitation in cascading boards.

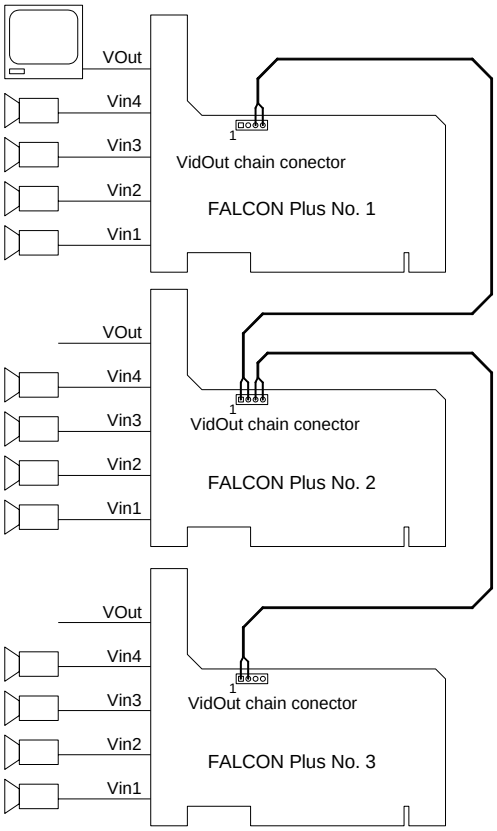

Figure 2: FALCONplus Video Daisy Chain

5.1.8 Hardware Watchdog

The FALCONplus Rev. 5 has a onboard hardware watchdog. After a programmable time delay a relay contact is activated (normally-open contact) if the application do not retrigger the watchdog. After connecting the relay contact with the reset input of the PC mainboard the whole system can be rebooted.

5.1.9 Accessories

- Reset Cable for watchdog
- VidOut chain cable for video output daisy chain.
- Opto IO board (option)

5.2 FALCONquattro

In this section the hardware of the FALCONquattro is described, the latest and most powerful member of the FALCON family. The connectors and a fundamental description of image acquisition is given here. In addition, all relevant differences in comparison with the other FALCON boards are explained.

© 2000-2004 by IDS Imaging Development Systems GmbH

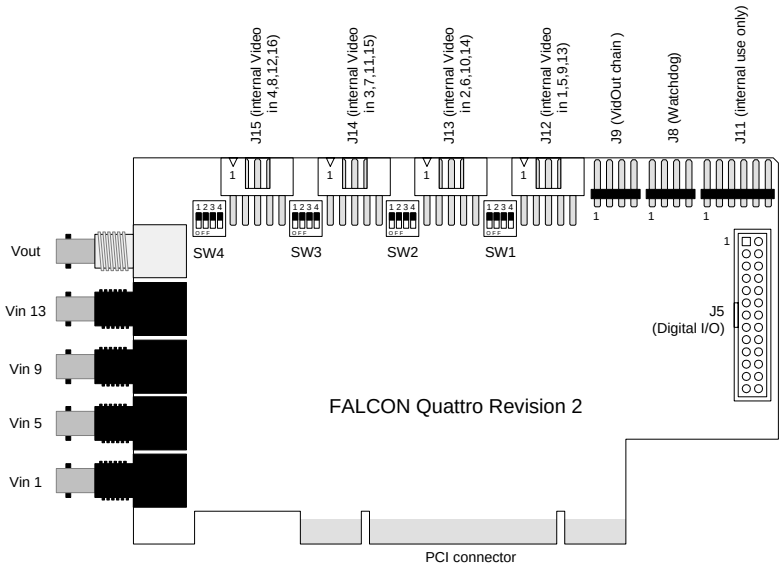

Figure 3: FALCONquattro

	Plug connection	Signals
J12	10 pin pole-type	Video inputs 1/5/9/13 (via video extension board) or via the BNC sockets
J13	10 pin pole-type	Video inputs 2/6/10/14 (via video extension board)
J14	10 pin pole-type	Video inputs 3/7/11/15 (via video extension board)
J15	10 pin pole-type	Video inputs 4/8/12/16 (via video extension board)
J5	26 pin pole-type	8 digital TTL-I/O, 8 trigger inputs each
	BNC sockets	Video inputs 1/5/9/13 (or via connector J1) and Video out (white)

Table 5: Plug connector chart FALCON

Pin assignment of J5 is described in section *7.1.2 FALCONquattro pin assignment*.

5.2.1 Video recording

FALCONquattro supports all usual monochrome and color cameras with composite video outputs. These are highly exact digitized and transferred into the PC. The max. possible resolution amounts to 768 x of 288 pixels in PAL. The FALCON driver supports also the independent switching of the video inputs in a desired order.

Up to 16 composite video sources can be connected to the FALCONquattro. The connection of the video inputs 1,5,9 and 13 is made via 4 BNC sockets on the slot or via socket J1.

Compared to FALCONplus, FALCONquattro does not only have one video encoder, but four. So, having four video encoder chips on the board and without switching via a multiplexer as with FALCONplus, FALCONquattro makes up to 4 camera images simultaneously available within 40 ms (with 50 Hz cameras).

5.2.2 Digital TTL I/O

FALCONquattro has 8 digital inputs, 4 trigger inputs and 8 digital outputs. To connect the digital inputs/outputs optionally a optocoupler board can be purchased. You can find details regarding the *optocoupler board* in the corresponding chapter *7.2.1 Connecting the frame grabber*.

5.2.3 Video Output

With the FALCONplus Rev. 5 every video input can be through-connected to the video output. The video output is separated compared to the video input and has got an own 75 Ohm video buffer.

5.2.4 Switchable 75 Ω termination

The 75 Ohm termination of each of the four video inputs can be switched on/off by the on board DIP switch. The default setting is ON.

5.2.5 Hardware Watchdog

The FALCONplus Rev. 5 has a onboard hardware watchdog. After a programmable time delay a relay contact is activated (normally-open contact) if the application do not retrigger the watchdog. After connecting the relay contact with the reset input of the PC mainboard the whole system can be rebooted.

© 2000-2004 by IDS Imaging Development Systems GmbH

6 iGuard® UPS operation

6.1 Preconditions

If iGuard® is being operated with a UPS (uninterruptable power supply), you can use the **iGuardPowerFailure.exe** program in order to terminate iGuard® under controlled conditions in the event of a power failure and record information about the power failure in the logbook.
In this case, the UPS being used has to be equipped with a software which starts an external program in the event of a power failure.

The IM-USV450Q, IM-USV700Q or IM-USV1250Q are supplied with the "DataWatch" software and have this capability.

6.2 Installation of iGuardPowerFailure.exe

The **iGuardPowerFailure.exe** program is included with the installation package though it is not installed as a standard. If you require this program, you can either install it by user definition or upon successful completion of program installation, call up **setup.exe** again from the iGuard® CD, select the "Change program" option and mark "iGuard®-Shutdown-Software application“.

6.3 Call-up parameters for iGuardPowerFailure.exe

The **iGuardPowerFailure.exe** program evaluates various command line parameters.

- 1
  UPS signals a power failure. An entry is made in the log-book.
  Example: “iGuardPowerFailure.exe 1“
- 2 or call-up without parameters
  iGuard® is terminated immediately.
  Example: ”iGuardPowerFailure.exe 2“
- 0
  Message that the power supply is present again. iGuard® is not terminated.
  Example: “iGuardPowerFailure.exe 0“

6.4 Configuration of the "DataWatch" software of online UPS in Windows

Proceed as follows to configure the "DataWatch" software in Windows:

1) Install "DataWatch“, connect with UPS using a serial cable.
2) Start "UPSman configuration“ (Start => Program => DataWatch Pro).
3) Select correct COM-Port.
4) Select "Advanced User".
5) Carry out following settings in "Files“:

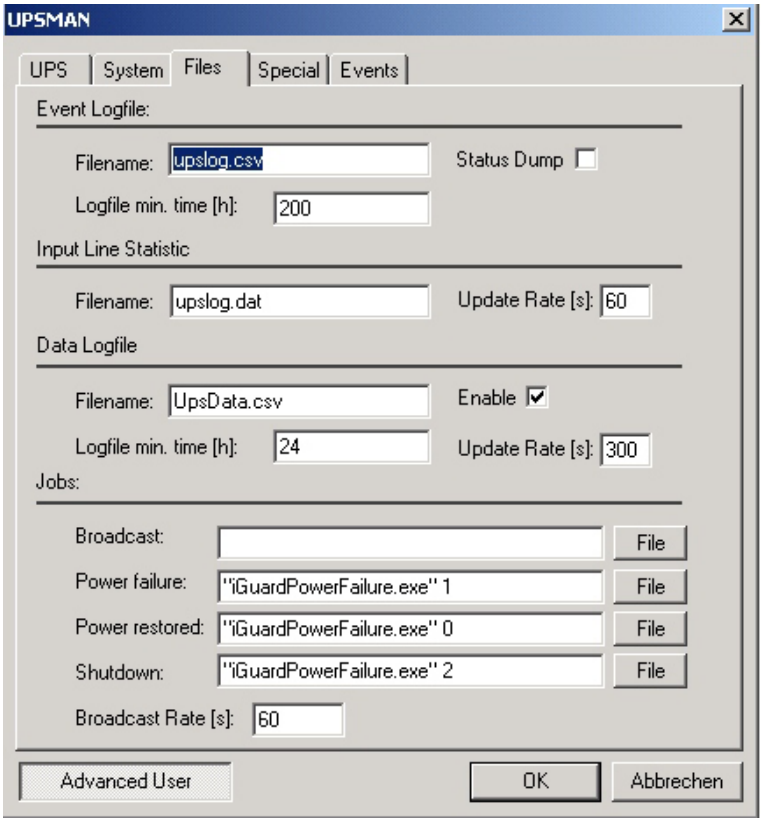

Figure 4: Configuration of the "DataWatch" software of online UPS

Power failure: „C:\Program\intermedia-x\iGuard®\iGuardPowerFailure.exe 1“
Power restored: „C:\Program\intermedia-x\iGuard®\iGuardPowerFailure.exe 0“
Shutdown: „C:\Program\intermedia-x\iGuard®\iGuardPowerFailure.exe 2“

Select the path details (in this case: C:\Program\intermedia-x\iGuard®) according to your installation.

You have to configure the UPS so that the operating sytem shuts down the operating system in the event of a power failure, switches off (230V switches off) the system and switches it on again (230V switches on).

You will have to configure the system in BIOS so that it automatically switches on and starts the operating system as soon as the 230V power supply is present. The BIOS must support this function. If not, the system is not suitable for an automatic restart after a power failure.
You will have to configure the operating system so that a login takes place automatically after a new start (see TweakUI tool for Windows NT) and iGuard® is started automatically (entry in “Autostart”- folder).
iGuard® should be configured so that the recording is started automatically when the program is started.

© 2000-2004 by IDS Imaging Development Systems GmbH

The "UPS shutdown" must be activated so that the UPS can switch the 230V supply to the system off and back on again.

In the following example, the UPS switches off the power supply to the system 180 seconds after the operating system has shut down and back on again after another 60 seconds – however, at the earliest as soon as the electrical circuit is OK again.

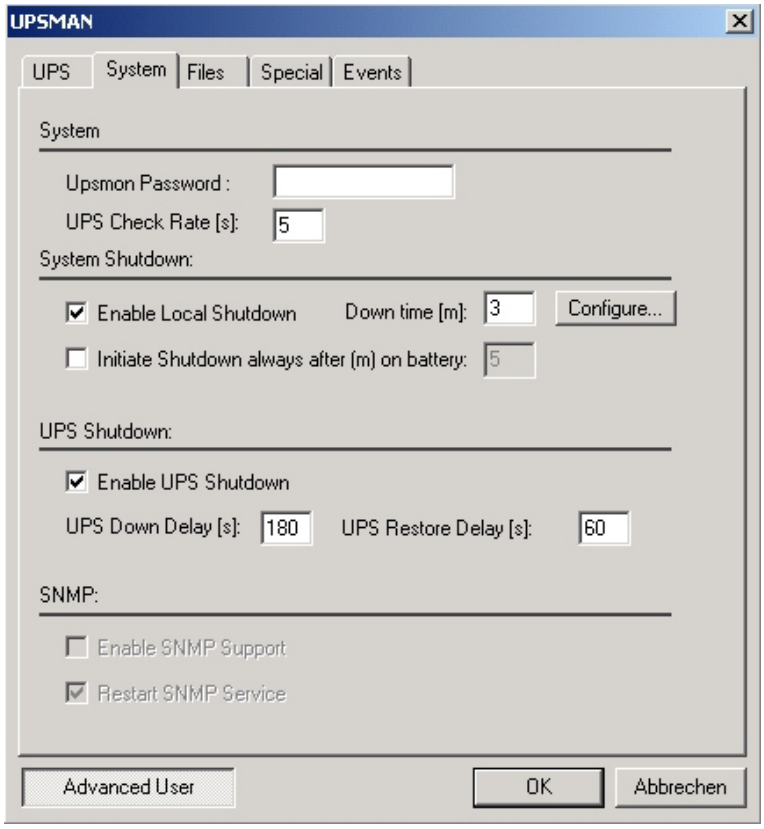

Figure 5: Configuration of the power supply to the system in Datawatch

7 Appendix

7.1 FALCONplus/FALCONquattro board technical data

Colour resolution:	Video recording and compression is always in YUYV format. Pictorial representation on the VGA card can be in 15-Bit, 16-Bit (Hi-Color), 24-Bit True Color (16.7 million colours), or 32-Bit True Color mode.
Video input:	FALCONplus 4 composite video inputs FALCONquattro up to 16 composite Video inputs
Video output:	1 composite video output
Video standards:	PAL, NTSC, CCIR, RS170, SECAM
Video scanning rate:	PAL: 14.75 MHz NTSC: 12.27 MHz
A/D conversion:	PAL: 1/50 s (20 ms) per field NTSC: 1/60 s (16.7 ms) per field
Geom. resolution:	PAL: 768 x 576 pixel with 2 fields NTSC: 640 x 480 pixel with 2 fields
Power consumption:	FALCONplus +5V 275mA +12V 75mA -12V 75mA FALCONquattro: +5V 1060mA +12V 45mA -12V 45mA

Table 6: Technical Details of the FALCONplus/FALCONquattro

7.1.1 FALCONplus plug connectors

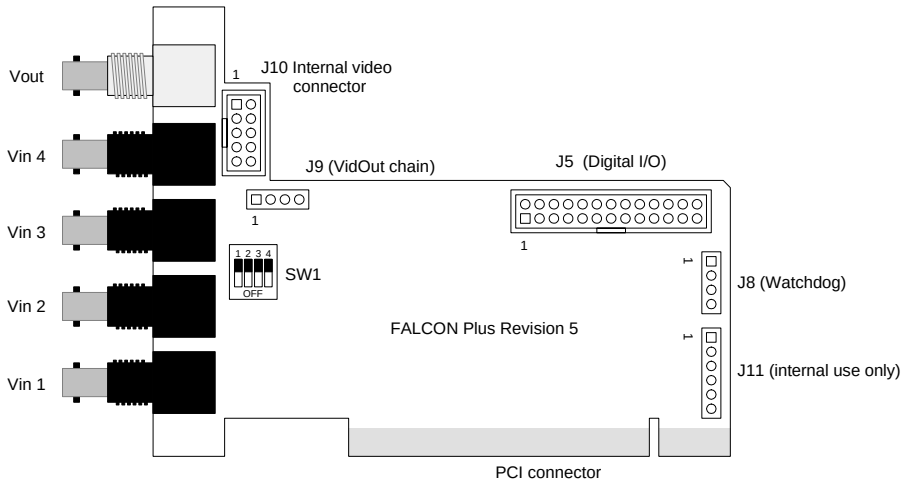

Figure 6: FALCONplus plug connectors

Pin assignment of J5:

Pin	Assignment	Pin	Assignment
1	Digital Input 1	14	Digital Output 6
2	Digital Input 2	15	Digital Output 7
3	Digital Input 3	16	Digital Output 8
4	Digital Input 4	17	Reserviert
5	Digital Input 5	18	Reserviert
6	Digital Input 6	19	Trigger Input 1
7	Digital Input 7	20	Trigger Input 2
8	Digital Input 8	21	Trigger Input 3
9	Digital Output 1	22	Trigger Input 4
10	Digital Output 2	23	GND
11	Digital Output 3	24	reserviert
12	Digital Output 4	25	reserviert
13	Digital Output 5	26	VCC (+5V)

Table 7: Pin assignment J5 (for FALCONplus)

© 2000-2004 by IDS Imaging Development Systems GmbH

SW1 – 75Ω Termination

SW1	75Ω Signal termination Video In 1 - 4
Typ	quad DIP switch
Switch	Assignment
1	for Vin_1
2	for Vin_2
3	for Vin_3
4	for Vin_4

Table 8: Assignment SW1 Termination (for FALCONplus)

J8 (Hardware Watchdog)

J8	Watchdog Reset
Pins	Assignment
1, 2	Relay contact (Shutter)
3,4	Relay contact (Shutter)

Table 9: J8 (Hardware Watchdog for FALCONplus)

7.1.2 FALCONquattro pin assignment

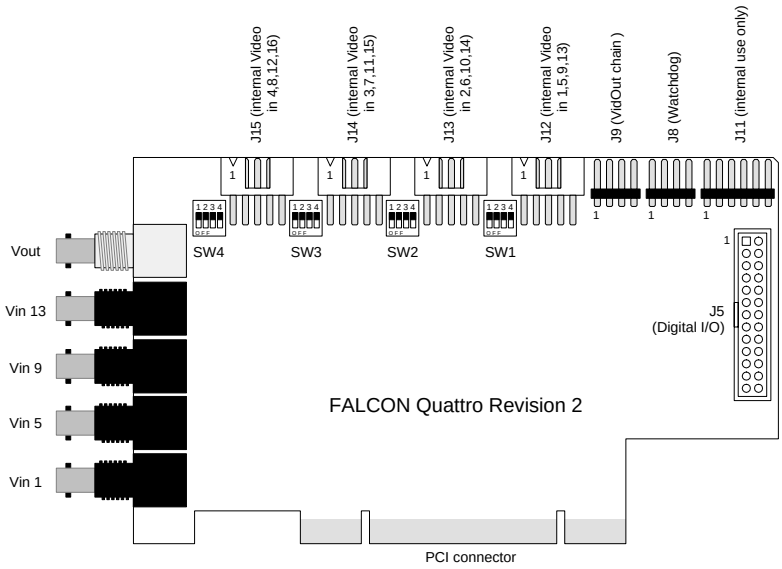

Figure 7: Pin assignment FALCONquattro

Pin assignment of J12 (video inputs 1/5/9/13):

Pin	Assignment	Pin	Assignment
1	GND	6	GND
2	GND	7	VIN 9 (Video In 9)
3	VIN 1 (Video In 1)	8	GND
4	GND	9	VIN 13 (Video In 13)
5	VIN 5 (Video In 5)	10	GND

Table 10: Pin assignment J1 (for FALCONquattro)

Pin assignment of J13 (video inputs 2/6/10/14):

Pin	Assignment	Pin	Assignment
1	GND	6	GND
2	GND	7	VIN 10 (Video In 10)
3	VIN 2 (Video In 2)	8	GND
4	GND	9	VIN 14 (Video In 14)
5	VIN 6 (Video In 6)	10	GND

Table 11: Pin assignment J2 (for FALCONquattro)

Pin assignment of J14 (video inputs 3/7/11/15):

Pin	Assignment	Pin	Assignment
1	GND	6	GND
2	GND	7	VIN 11 (Video In 11)
3	VIN 3 (Video In 3)	8	GND
4	GND	9	VIN 15 (Video In 15)
5	VIN 7 (Video In 7)	10	GND

Table 12: Pin assignment J3 (for FALCONquattro)

© 2000-2004 by IDS Imaging Development Systems GmbH

Pin assignment of J15 (video inputs 4/8/12/16):

Pin	Assignment	Pin	Assignment
1	GND	6	GND
2	GND	7	VIN 12 (Video In 12)
3	VIN 4 (Video In 4)	8	GND
4	GND	9	VIN 16 (Video In 16)
5	VIN 8 (Video In 8)	10	GND

Table 13: Pin assignment J4 (for FALCONquattro)

Pin assignment of J5 (trigger inputs):

Pin	Assignment	Pin	Assignment
1	Digital Input 1	14	Digital Output 6
2	Digital Input 2	15	Digital Output 7
3	Digital Input 3	16	Digital Output 8
4	Digital Input 4	17	Trigger Input 5
5	Digital Input 5	18	Trigger Input 6
6	Digital Input 6	19	Trigger Input 1
7	Digital Input 7	20	Trigger Input 2
8	Digital Input 8	21	Trigger Input 3
9	Digital Output 1	22	Trigger Input 4
10	Digital Output 2	23	GND
11	Digital Output 3	24	Trigger Input 7
12	Digital Output 4	25	Trigger Input 8
13	Digital Output 5	26	VCC (+5V)

Table 14: Pin assignment J5 (for FALCONquattro)

J8 (Hardware Watchdog)

J8	Watchdog Reset
Pins	Assignment
1, 2	Relay contact (Shutter)
3,4	Relay contact (Shutter)

Table 15: J8 (Hardware Watchdog for FALCONquattro)

© 2000-2004 by IDS Imaging Development Systems GmbH

SW1 Assignment (75Ω termination Video In 1,5,9 und 13):

Pin	Assignment	Pin	Assignment
1	Vin 1 (Video In 1)	6	Vin 9 (Video In 9)
2	Vin 5 (Video In 5)	7	VIN 13 (Video In 13)

SW2 Assignment (75Ω termination Video In 2,6,10 und 14):

Pin	Assignment	Pin	Assignment
1	Vin 2 (Video In 2)	6	Vin 10 (Video In 10)
2	Vin 6 (Video In 6)	7	VIN 14 (Video In 14)

SW3 Assignment (75Ω Terminierung Video In 3,7,11 und 15):

Pin	Assignment	Pin	Assignment
1	Vin 3 (Video In 3)	6	Vin 11 (Video In 11)
2	Vin 7 (Video In 7)	7	VIN 15 (Video In 15)

SW4 Assignment (75Ω Terminierung Video In 4,8,12 und 16):

Pin	Assignment	Pin	Assignment
1	Vin 4 (Video In 4)	6	Vin 12 (Video In 12)
2	Vin 8 (Video In 8)	7	VIN 16 (Video In 16)

7.2 Optocoupler-boards for FALCONplus, FALCONquattro (optional)

The inputs switch voltages between 5V and 24V, the outputs are switching the attached device to ground. All outputs can handle a maximum of 100 mA. The fuse protection is realized with a reversible fuse. All inputs are short-circuit prooved. For attaching inductive devices, we advice the use of protective circuits. The optocoupler boards do not need necessarily a PC Slot. We recommend to use a free Slot.

© 2000-2004 by IDS Imaging Development Systems GmbH

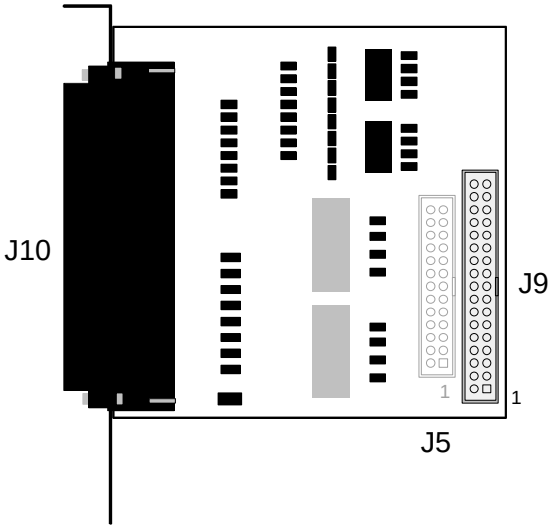

Figure 8: Optocoupler-board OPTO I/O III for FALCONplus/quattro

7.2.1 Connecting the frame grabber

Via J5 (FALCON Family) and the 24 pin ribbon cable the optocoupler-extensionboard is connected to the specific frame grabber.

7.2.2 36 pin adapter bushing (J10) of the OPTO I/O III

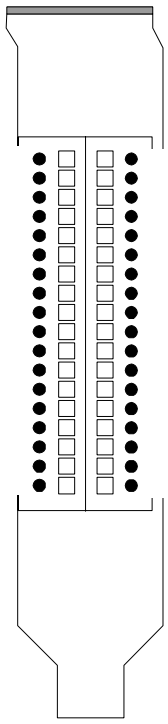

Pin	Assignment	Pin	Assignment
36	GND	35	Power IN (max. 24V)
34	GND	33	Digital Input 4
32	GND	31	Digital Input 3
30	GND	29	Digital Input 2
28	GND	27	Digital Input 1
26	GND	25	Alarm input 4
24	GND	23	Alarm input 3
22	GND	21	Alarm input 2
20	GND	19	Alarm input 1
18	GND	17	Alarm output 8
16	GND	15	Alarm output 7
14	GND	13	Alarm output 6
12	GND	11	Alarm output 5
10	GND	9	Alarm output 4
8	GND	7	Alarm output 3
6	GND	5	Alarm output 2
4	GND	3	Alarm output 1
2	GND	1	Power IN (max. 24V)

Table 1: Pin assignment J10 of the OPTO I/O III

NOTE:
For correct support of the OPTO I/O III in iGuard® it is necessary to edit „pirmcr.ini“. The file is located in the windows directory (C:\windows\ resp. C:\winnt\ ). Open the file with an editor (e.g. the Windows editor in the Programs-Accessories Folder) and add in the next free line „Bundle=1“. Save the file and restart iGuard® if necessary.

© 2000-2004 by IDS Imaging Development Systems GmbH

7.2.3 Input circuit OPTO I/O III

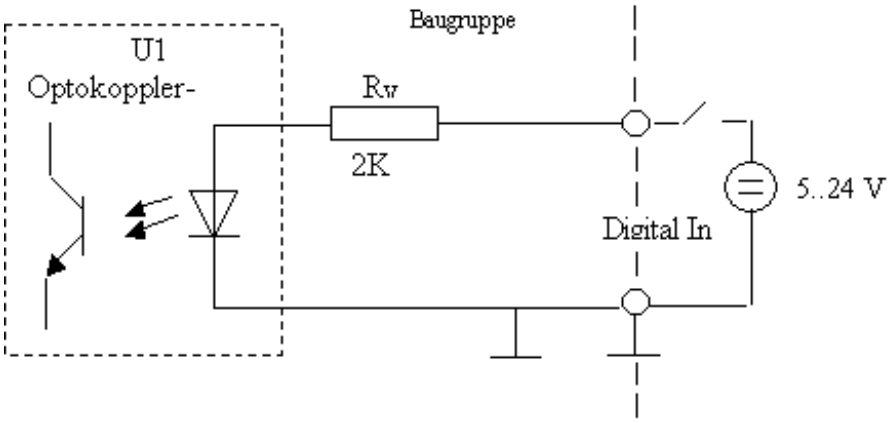

Figure 9: Optocoupler-Input circuit

7.2.4 Output circuit of the OPTO I/O III

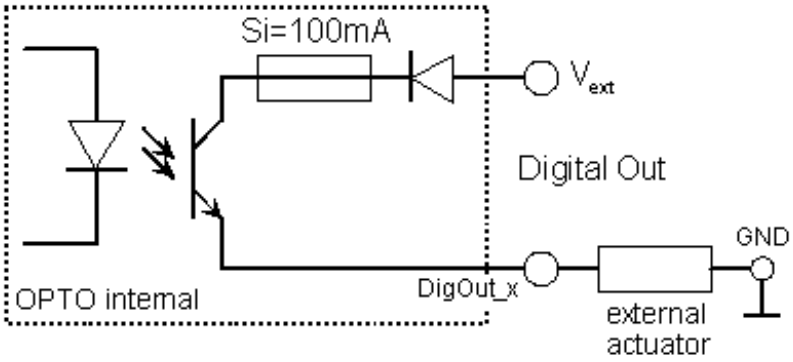

Figure 10: Optocoupler-output circuit of the OPTO I/O III

7.2.5 Optocoupler boards technical Data

Alarm inputs

Number of Trigger- resp. Alarm inputs:	OPTO I/O III: 4
Trigger edge:	positive oder negative
Activating Interrupts:	Yes
Voltage range:	5 to 24 V DC
Input current:	12 mA (typical.)
Galvanic separation:	Up to 300 V

Table 16: Technical Details of the optocpupler boards, alarm inputs

Digital Inputs:

Number of digital Inputs:	OPTO I/O III: 4
Activating Interrupts:	No
Voltage range:	5 to 24 V DC
Input current:	12 mA (typical)
Galvanic separation:	Up to 300 V

Table 17: Technical Details of the optocpupler boards, digital inputs

© 2000-2004 by IDS Imaging Development Systems GmbH

Table of figures

Figure 1: FALCONplus 14
Figure 2: FALCONplus Video Daisy Chain 16
Figure 3: FALCONquattro 17
Figure 4: Configuration of the "DataWatch" software of online UPS 20
Figure 5: Configuration of the power supply to the system in Datawatch 21
Figure 6: FALCONplus plug connectors 24
Figure 7: Pin assignment FALCONquattro 25
Figure 8: Optocoupler-board OPTO I/O III for FALCONplus/quattro 29
Figure 9: Optocoupler-Input circuit 31
Figure 10: Optocoupler-output circuit of the OPTO I/O III 31

Index of tables

Table 1: Attributes for operating with FALCON 4
Table 2: Installed Program- and Data base files in Windows 11
Table 3: FALCONplus plug connectors 14
Table 4: FALCONplus switching rates 15
Table 5: Plug connector chart FALCON 17
Table 6: Technical Details of the FALCONplus/FALCONquattro 23
Table 7: Pin assignment J5 (for FALCONplus) 24
Table 8: Assignment SW1 Termination (for FALCONplus) 25
Table 9: J8 (Hardware Watchdog for FALCONplus) 25
Table 10: Pin assignment J1 (for FALCONquattro) 26
Table 11: Pin assignment J2 (for FALCONquattro) 26
Table 12: Pin assignment J3 (for FALCONquattro) 26
Table 13: Pin assignment J4 (for FALCONquattro) 27
Table 14: Pin assignment J5 (for FALCONquattro) 27
Table 15: J8 (Hardware Watchdog for FALCONquattro) 27
Table 16: Technical Details of the optocpupler boards, alarm inputs 32
Table 17: Technical Details of the optocpupler boards, digital inputs 32

© 2000-2004 by IDS Imaging Development Systems GmbH